Bluetooth Low Energy (BLE) Development Kit

User Manual

Version 2.5

DVK-BL600-SA, DVK-BL600-SC, DVK-BL600-ST

global solutions: local support™

Americas: +1-800-492-2320
Europe: +44-1628-858-940
Hong Kong: +852-2923-0610

Embedded Wireless Solutions Support Center: http://ews-support.lairdtech.com

www.lairdtech.com/bluetooth

REVISION HISTORY

Revision	Date	Changes	Approved By
1.0	22 Feb 2013	First Public Release 0 rev 1 PCB	Jonathan Kaye
2.0	11 April 2013	Technical and grammatical revisions for rev 02 PCB	Jonathan Kaye
2.1	5 July 2013	**Added:** Section3.6, "OTA smart BASIC application download feature" **Updated:** Section 3.1 (Features) smart BASIC runtime engine FW upgrade capability Via UART (using the FTDI USB-UART).	Jonathan Kaye
2.2	20 Dec 2013	**Changed:** Section 0, nAutoRUN Pin and Operating Modes. To make it clear nAutoRUN pin control from PC (CON12 pin2-6 closed) or J6 (CON12pin2-6 open). Added Figure 6.	Jonathan Kaye
2.3	28 Jan 2014	Added Figure (Figure 2) to define correct 'out of the box' configuration settings.	Jonathan Kaye
2.4	01 May 2014	Updated Figure 2 (correct development board settings) to update the CON14 default settings.	Jonathan Kaye
2.5	10 April 2015	Added BL620 information.	Jonathan Kaye

CONTENTS

Revision History 2
Contents 3
1 Laird Bluetooth Low Energy Development Kit 4
2 Overview 4
2.1 Introduction 4
2.2 Package Contents 4
3 BLE Development Kit – Main Development Board 5
3.1 Key Features 5
3.2 Understanding the Development Board 6
4 Functional Blocks 8
4.1 Power Supply 8
4.1.1 Additional Power Option (for BL600 only) - Coin Cell 9
4.2 Reset Button 9
4.3 JTAG Interface 9
4.4 4-wire UART Serial Interface 9
4.4.1 UART Mapping 9
4.4.2 UART Interface Driven by USB 9
4.4.3 UART Interface Driven by External Source 10
4.5 nAutoRUN Pin and Operating Modes 11
4.6 OTA (Over the Air) *smart* BASIC application download 12
5 Software 12
6 Breakout Connector Pinouts 13
6.1 JP2, JP3, JP4, JP5 SIO (Special Input / Output Sockets) Breakout Connectors 13
6.1.1 JP2 SIO_0-7 14
6.1.2 JP3 SIO_8-15 15
6.1.3 JP4 SIO_16-19 15
6.1.4 JP5 SIO_21-30 15
6.2 Additional Peripherals / Sensors 16
6.2.1 Buzzer 16
6.2.2 Temperature Sensor 17
6.2.3 Trim Potentiometer 18
6.2.4 Push Buttons and LEDs 19
7 Other Features 20
7.1 Current Consumption Measurement 20
8 Additional Documentation 21
9 Appendix 22
9.1 Coin Cell Insertion 22
9.2 Coin Cell Removal 23

1 Laird Bluetooth Low Energy Development Kit

Part number: DVK-BL600-SA / DVK-BL600-SC / DVK-BL600-ST
Applicable to the following BLE module part numbers:

- BL600-SA BL600 module featuring *smart*BASIC with integrated antenna
- BL600-SC BL600 module featuring *smart*BASIC with IPEX MHF4 connector
- BL600-ST BL600 module featuring *smart*BASIC with trace pads

---

IMPORTANT!

This guide (and the BL600 DVK) also applies to the Laird BL620. The BL620 uses the same module hardware as the BL600 but it has a new firmware that supports Central mode connectivity.

Note that the BL620 module supports a JTAG upgrade but has no capability to upgrade via UART.

---

2 Overview

The Laird BLE development kit provides a platform for rapid wireless connectivity prototyping, providing multiple options for the development of Bluetooth Low Energy (BLE) applications.

This manual is for Rev. 02 and later of the development PCB and relates to DVK-BL600-V02 and later on the PCB itself. The complete functionality of the development kit hardware requires the use of Laird BL600 series *smart*BASIC runtime engine FW version v1.1.50.0 or greater.

2.1 Introduction

The Laird BLE development kit is designed to support the rapid development of applications and software for the BL600 series of BLE modules featuring Laird's innovative event driven programming language – *smart*BASIC. More information regarding this product series including a detailed module User's Manual and *smart*BASIC user guide is available on the Laird's BL600 product pages.

2.2 Package Contents

All kits contain the following items:

Development Board	The development board has the required BL600 module already soldered onto it and exposes all the various hardware interfaces available.
Power Options	▪ USB cable – Type A to mini type B. The cable also provides serial communications via the FTDI USB – RS232 converter chip on the development board. ▪ DC barrel plug with clips for connection to external power supply
Segger JTAG board – 'jlink lite'	This third party JTAG interface provides the ability to upgrade the base firmware for the BL600 module. Additional details available at http://www.segger.com/cms/jlink-lite-cortexm.html
Pin Headers x 4	Supplied to allow simple connection to SIO lines via the through hole plated areas JP2, JP3, JP4 and JP5. The headers are 2 x 5 way and are 2.54 mm pitch.
IDC Cable x 4	Supplied to allow simple connection to the 2 x 5 way pin headers into JP2, JP3, JP4 and JP5. The IDC cables are 2.54 mm pitch.
Web link Card	Provides links to additional information including the BL600 user manual, firmware, Laird BL600 app from the Apple app store, terminal utilities, schematics, quick start guides, and firmware release notes.

3 BLE Development Kit – Main Development Board

This section describes the BL600 development board hardware. The BL600 development board is delivered with the BL600 series module loaded with integrated *smart* BASIC runtime engine FW but no onboard *smart* BASIC application; because of this, it starts up in AT command mode by default.

smart BASIC applications are simple and easy to develop for any BLE application. Sample *smart* BASIC applications are available to download from the Laird BL600 product webpage or via the Laird global FAE network.

The BL600 development board is a universal development tool to highlight the capabilities of the BL600 module. The development kit is supplied in a default configuration which should be suitable for multiple experimentation options. It also offers a number micro-DIP switches that help isolate on-board sensors and UART from the BL600 module to create different configurations. This allows you to test different operating scenarios.

The development board allows the BL600 series module to physically connect to a PC via the supplied USB cable for development purposes. The development board provides USB-to-Virtual COM port conversion through a FTDI chip – part number FT232R. Any Windows PC (XP or later) should auto-install the necessary drivers; if your PC cannot locate the drivers, you can download them from http://www.ftdichip.com/Drivers/VCP.htm

3.1 Key Features

The BL600 development board has the following features:

- BL600 series module soldered on-board.
- Power supply options for powering development board from:
  - USB
  - external DC supply
  - AAA batteries (3xAAA battery holder fitted on underside of development board)
- Regulated 3.3 V for powering the BL600 module. Optional regulated 1.8 V for powering the BL600 module.
- Power supply option for coin cell operation of the BL600 series module only (not development board).
- USB to UART bridge (FTDI chip).
- BL600 UART can be interfaced to:
  - USB (PC) using the USB-UART bridge
  - External UART source (using IO break-out connector when development board powered from DC jack)
- Current measuring (for BL600 module only) options:
  - Pin header (Ammeter)
  - Current shunt monitor IC (volt meter or oscilloscope)
  - Series resistor for differential measurement (oscilloscope)
- IO break-out (four 2x5-pin 2.54mm pitch headers) connectors interface for plugging-in external modules/sensors, and accessing all interfaces of the BL600 module [UART, SPI, I2C, SIO (DIO or AIN (ADCs)].
- Two Buttons and two LEDs for user interaction.
- Two on-board sensors (analogue output): Temperature and Trim Pot.
- One buzzer.
- Micro DIP switches that allow the on-board sensors, LED's (and USB UART FTDI bridge) to be disconnected from BL600 module.
- SMA connector (reverse SMA) for an external antenna. This is **only** applicable to BL600-ST module variant (with RF brought out to edge pads).
- *smart* BASIC runtime engine FW upgrade capability:
  - Via JTAG using the supplied Segger J-Link programmer
  - Via UART (using the FTDI USB-UART).
- *smart* BASIC application upgrade capability:
  - Via UART (using the FTDI USB-UART).

3.2 Understanding the Development Board

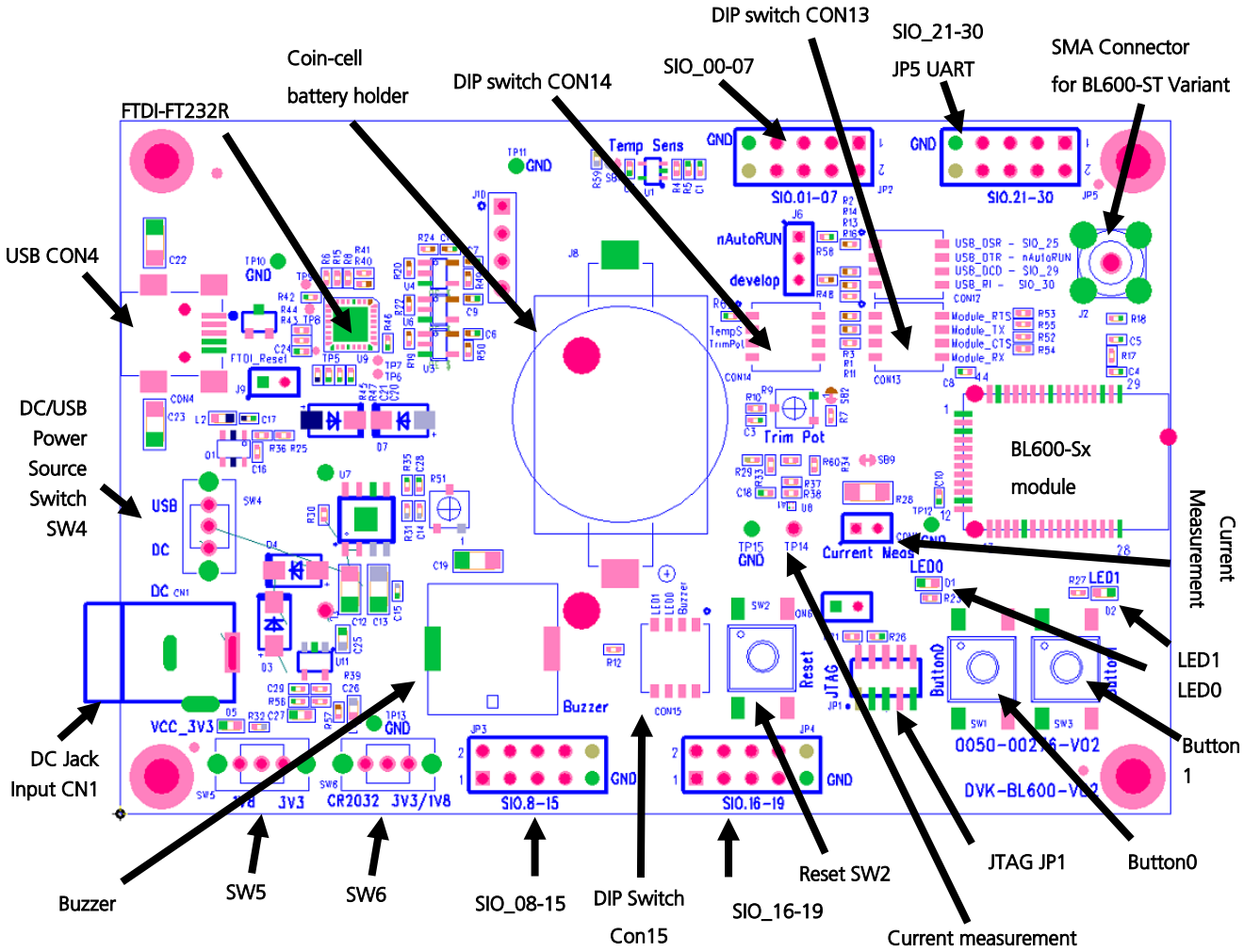

Figure 1: Development board

Important! To ensure correct 'out of the box' configuration, the BL600 development board must be set according to Figure 2.

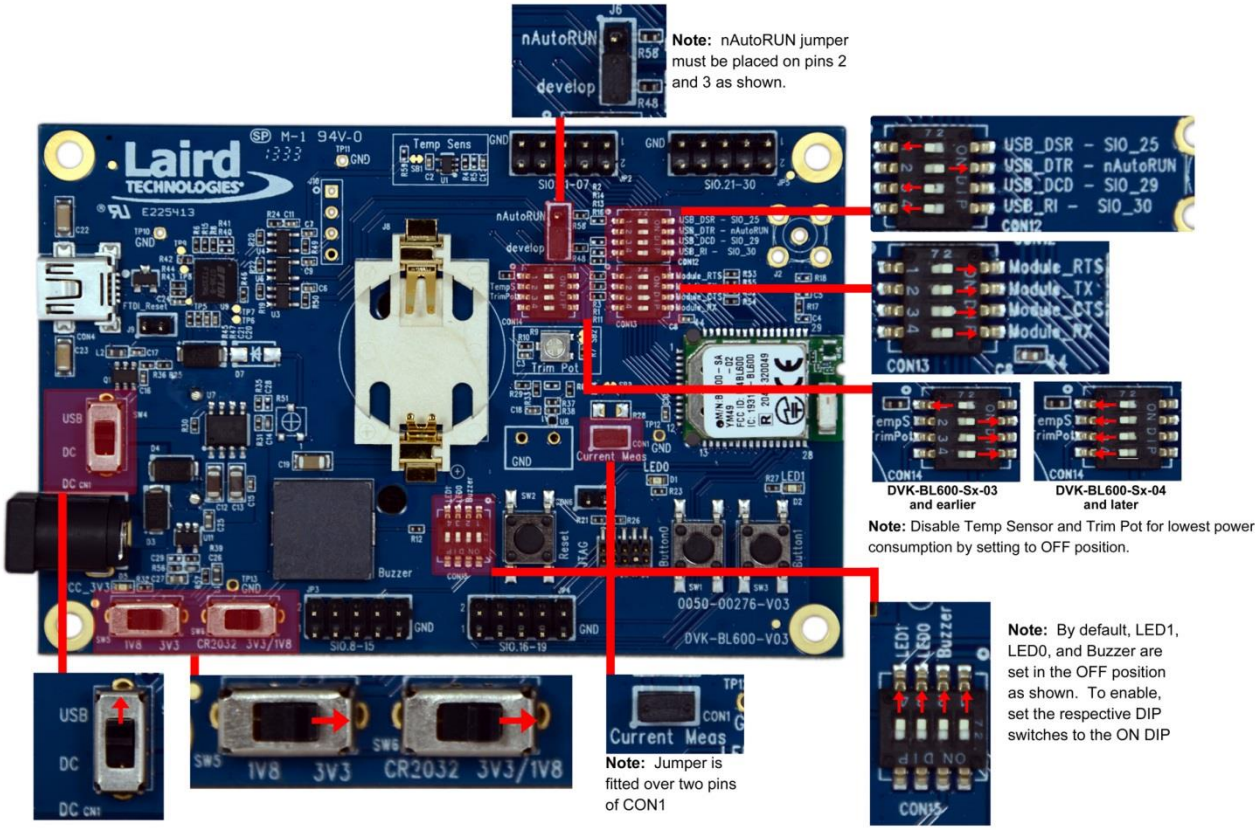

Figure 2: Correct development board settings

4 FUNCTIONAL BLOCKS

The development board is formed from the following major functional blocks:

4.1 Power Supply

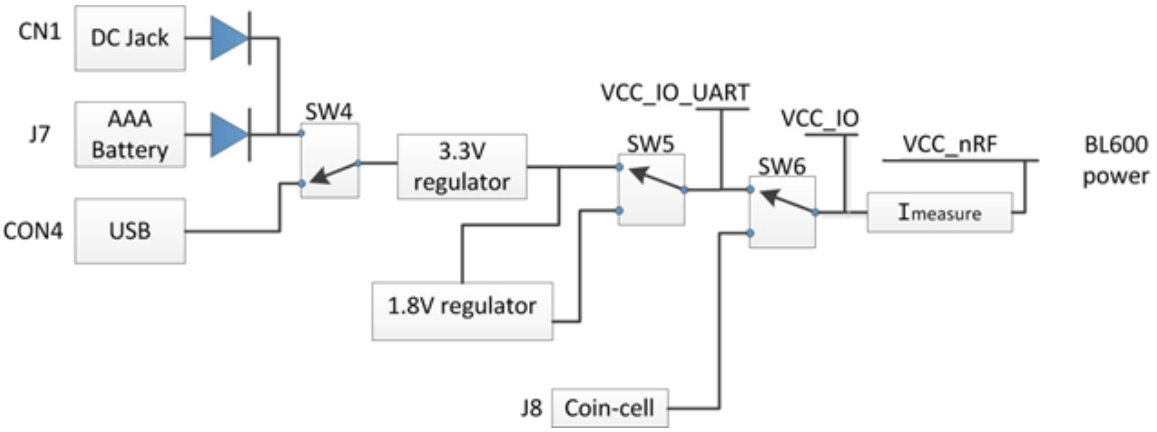

Figure 3: BL600 power supply

The development board can be powered from 4.5-5.5 V supply (into DC jack connector CN1), 3xAAA batteries (holder J7 mounted on underside of board), or from the USB (type mini-B connector (CON4). The power source fed into DC jack (CN1) or 3xAAA batteries (J7) is combined together through diodes (diode-OR) and fed to the SW4 switch that allows selection of power source between either USB or the DC jack/AAA.

The 5 V from the USB or the DC jack/AAA batteries is regulated down to 3.3 V with an on-board regulator on the development board. The CR2032 coin cell voltage is not regulated but is fed directly to BL600 module supply pin. Switch SW6 selects between the regulated 3.3 V and coin cell. Coin cell powers only the BLE600 module directly (on the development board, this is power domain VCC_nRF) and optionally (through R29) provides power to power domain VCC_IO.

Note: The coin cell only powers the BL600 module and not the development board.

Default position of SW5 is to select regulated 3.3 V.

Note: The development board has a 1.8 V regulator for the possibility of powering the BL600 module from a 1.8 V rail (by changing SW5 position).

The development board's 3.3 V regulator provides power to the BLE module and USB UART bridge interface as well as to sensors on the development board.

	Switch Positions		
Development Board Power Source	SW4	SW5	SW6
USB (CON4)	Position "USB"	Position "3V3" always	Position "3V3/1V8"
DC jack (CN1) or AAA battery (J7).[Note 1]	Position "DC"	Position "3V3" always	Position "3V3/1V8"always

Note 1: The development board is powered from DC jack (or AAA batteries) when an external UART source is to be interfaced to BL600 module (using breakout connector JP5).

On the development board, the power domain:

- VCC_nRF supplies the BL600 series module only. Current measuring block on development board only measures the current into power domain VCC_nRF.
- VCC_IO_UART supplies the FTDI chip IO and all other sensors and circuitry.
- VCC_IO is wired to the header connectors (JP2, JP3, JP4, JP5) via R29 and can be used to power external devices sensors.

4.1.1 Additional Power Option (for BL600 only) - Coin Cell

The coin cell powers only the BLE600 module directly (on the development board, this is power domain VCC_nRF) and optionally (through R29) provides power to power domain VCC_IO.

Refer to the Appendix for the correct method of coin cell insertion and removal.

4.2 Reset Button

The development board has a reset button (SW2). The Reset is active low (SW2 pushed down). To view its location, refer to Figure 1.

4.3 JTAG Interface

The development board has a 2-wire interface (JP1) which is used for BL600 series module *smart*BASIC runtime engine FW upgrade. To view its location, refer to Figure 1.

4.4 4-wire UART Serial Interface

The development board provides access to the BL600 module 4-wire UART interface (TX, RX, CTS, RTS) either through USB (via U9 FTDI USB-UART convertor chip) or through a breakout header connector JP5. Refer to Figure 4.

Note: BL600 module provides 4-wire UART interface on the HW and the other 4 signals (DTR, DSR, DCD, RI) which are low bandwidth signals can be implemented in a *smart*BASIC application, using any spare digital SIO pins.

4.4.1 UART Mapping

UART connection on the BL600 series module and FTDI IC are shown in table below. Refer to Figure 4 to see how the BL600 series module UART is mapped to the breakout header connector (JP5).

BL600 SIO	BL600 Default function	FTDI IC UART
SIO.21	UART_TX (output)	USB_RX
SIO.22	UART_RX (input)	USB_TX
SIO.23	UART_RTS (output)	USB_CTS
SIO.24	UART_CTS (input)	USB_RTS

Additional SIO pins are also routed to the FTDI chip via a switch block. For example, the nAutoRUN input pin on the module can be driven by the DTR output pin of the FTDI chip. This allows testing the $autorun$ application on boot.

4.4.2 UART Interface Driven by USB

- USB Connector. The development kit provides a USB Type mini-B connector (CON4) which allows connection to any USB host device. The connector optionally supplies power to the development kit and the USB signals are connected to a USB to serial convertor device (FT232R), when SW4 is set to 'USB' position.

- **USB – UART.** The development kit is fitted with a (U9) FTDI FT232R USB to UART converter which provides USB-to-Virtual COM port on any Windows PC (XP or later). Upon connection, Windows auto-installs the required drivers. For more details and driver downloads, visit http://www.ftdichip.com/Products/FT232R.htm.
- **UART interface driven by USB FTDI chip.** In normal operation, the BL600 UART interface is driven by the FTDI FT232R USB to UART converter.

4.4.3 UART Interface Driven by External Source

- **UART interface driven by external UART source.** The BL600 module UART interface (TX, RX, CTS, RTS) is presented at a 2.54 mm (0.1") pitch header (JP5). To allow the BL600 UART interface to be driven from the breakout header connector (JP5):
  - Development board must be powered from DC jack (CN1) or AAA batteries (J7) and switch SW4 is in position "DC".
  - The FTDI device must be held in reset which is achieved automatically by removal of USB cable or SW4 is in position "DC".
  - Also micro-DIP switch CON13 allows the four BL600 UART pins to be physically isolated as well from USB-UART FTDI device. Physical micro-DIP switch body has text "ON" on the closed side. By default CON13 is closed.

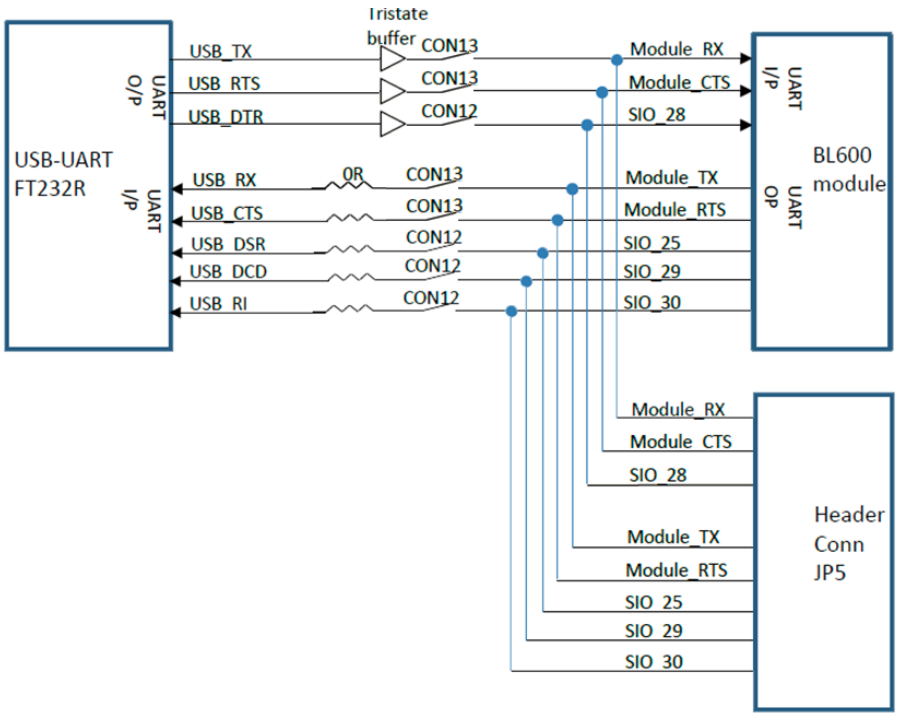

Figure 4: USB to UART Interface and Header to UART interface

4.5 nAutoRUN Pin and Operating Modes

On the development board USB_DTR output (FTDI chip U9) from PC is wired to BL600 module pin SIO.28 (pin40) which is the nAutoRUN pin.

Note: *smart*BASIC runtime engine FW checks for the status of nAutoRUN during power-up or reset. The nAutoRUN pin detects if the BL600 module should power up into "Interactive / Development Mode (3.3 V)" or "Self-contained Run Mode (0v)". The module enters Self-contained Run Mode if the nAutoRUN pin is at 0V and an application called "$autorun$" exists in the modules file system, then the *smart*BASIC runtime engine FW will execute the *smart*BASIC application script automatically; hence the name *Self-contained Run mode*.

The nAutoRUN pin inhibits the automatic launch $autorun$ application on power-up. Tying nAutoRUN to 3.3V inhibits the $autorun$ application from running. The J6 3-pin header allows a jumper to be fitted to select between the two operating modes.

Note: Micro DIP switch CON12 pin2-6 MUST be open when using J6 3-pin header to select nAutoRUN function.

Table 4-1: BL600 nAutoRUN pin

nAutoRUN pin	BL600 Operating Mode		
	Interactive / Development Mode	Self-contained Run Mode	Circuit
J6 jumper position			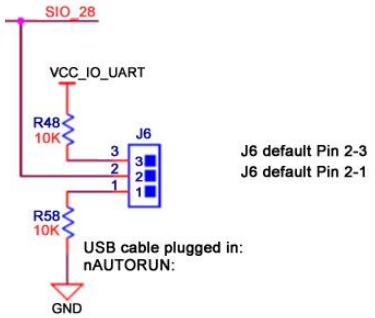

Micro DIP switch CON12 allows the 4 x UART signals from the FTDI chip (USB_DSR, USB_DTR, USB_DCD, USB_RI) to be disconnected from reaching the BL600. By default the DIP switch is open.

Since BL600 nAutoRUN pin40 (SIO.28) is connected to PC FTDI USB_DTR line, the Micro DIP switch:-

- CON12 (pin 2-6) MUST be CLOSED (in ON position) to allow PC (using uWTerminal) to control nAutoRUN pin (SIO.28); with no jumper fitted to J6 (see Figure 5).
- CON12 (pin 2-6) MUST be OPEN to allow nAutoRUN pin (SIO.28) to be controlled by J6 (with jumper fitted to J6 pin1-2 to select nAutoRUN (see Figure 6).

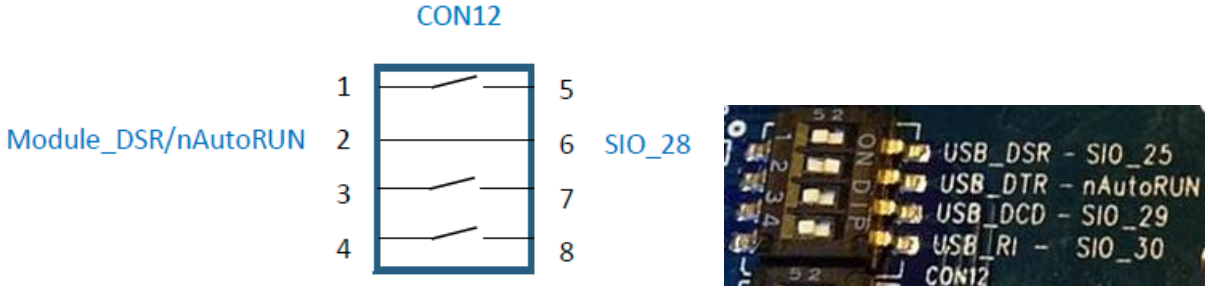

Figure 5: Micro DIP switch CON12 closed (nAutoRUN controlled by PC)

Note: The additional lines of the DIP switch CON12 are not currently utilised and need to remain open, as shown in Figure 5.

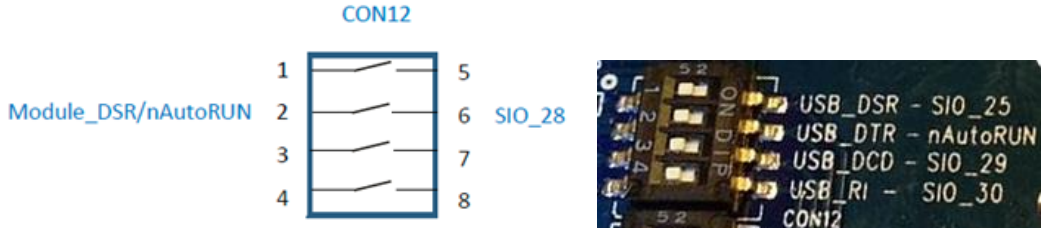

Figure 6: Micro DIP switch CON12 open (nAutoRUN controlled by J6 jumper on pin 1-2)

4.6 OTA (Over the Air) *smart*BASIC application download

In a future release, it will be possible to download *smart*BASIC applications over the air with the BL600. To enable this feature, SIO_7 must be pulled high externally.

On the development board, header connector JP2-pin 8 brings out the BL600 SIO_7; JP2-pin10 brings out VCC. To pull BL600 SIO_7 high (to VCC_IO), connect JP2-pin 8 to JP2-pin10 by fitting a jumper or fly-lead.

Refer to latest FW release (v1_2_54_0-r2) documentation (FW release notes and *smart*BASIC user manual) for details.

5 SOFTWARE

The development board connects the BL600 module to a virtual COM port of a PC or other device. From a PC, you can communicate with the module using Laird's UW Terminal application (version 6.51 or newer).

UW Terminal is a terminal emulation application capable of running on Windows 98, ME, 2000, XP, Windows 7, and Windows 8 operating systems. It was developed specifically to aid development and testing of Laird modules. It allows connection to serial devices using any combination of the communications parameters listed in Table 5-1.

Table 5-1: Communication Parameters

COM Port:	1 to 255
Baud rate:	300 to 921,600. **Note:** Baud rate default is 9600.
Parity:	None, Odd, Even
Data Bits:	8
Stop Bits:	1 or 2
Handshaking:	None or CTS/RTS

Note: Baud rates higher than 115200 depend on the COM port capabilities of the host PC and may require an external USB – RS232 adapter or PCMCIA card.

The benefits of using UW Terminal include:

- Continually displayed status of DSR, CTS, DCD, and RI
- Direct control of DTR on the host PC via a check box
- Direct control of RTS, if CTS / RTS Handshaking is disabled when UWTerminal is launched
- Sending of BREAK signals

- BASIC tab provides standalone testing and development of *smart*BASIC ** applications and allows UWTerminal operation to be automated.
- The BASIC embedded into UWTerminal, since version 6.20, shares the same core functionality as the BL600 series module.
- Additional built-in features (right click in Terminal tab screen) to accelerate development including Automation and various XCompile / Load / Run options for downloading *smart*BASIC applications into the BL600.

Note: Full details on *smart*BASIC are available in the *smart*BASIC User Manual available for download at the Laird website. This document also includes a basic introduction to the UW terminal program.

Tip: If the module returns a four hex digit error code: In UwTerminal, select those four digits, right-click, and select Lookup Selected ErrorCode. A description of the error is printed on screen.

6 Breakout Connector Pinouts

6.1 JP2, JP3, JP4, JP5 SIO (Special Input / Output Sockets) Breakout Connectors

Access to all 28 BL600 series module signal pins (SIO's = signal Input /Output) is available on four connectors JP2, JP3, JP4, JP5 (2.54 mm pitch 2x5 headers).

Note: The BL600 module signal pins designation SIO (Signal Input /Output).

- DEFAULT type is DIO (Digital Input or Output) or UART (on fixed pins)
- ALTERNATE type is either AIN (Analog Input ADC), I2C, SPI, DIO (on fixed pins)
- Alternate function is selectable in *smart*BASIC application
- DIO or AIN functionality is selected using the GpioSetFunc() function in *smart*BASIC
- AIN configuration selected using GpioSetFunc() function
- I2C, UART, SPI controlled by xxxOPEN() functions in *smart*BASIC
- SIO_21 to SIO_24 are DIO by default when $autorun$ app runs on power up

These breakout connectors can interface to a wide array of sensors with the BL600 function user configurable by *smart*BASIC application script from the default function (DIO, UART) to alternate functions (AIN (ADC), I2C, SPI, DIO). The BLE development kit incorporates additional connectors and cables inside the box, to enable simple, hassle-free testing of the multiple interfaces.

Note: The orientation of the breakout connectors (shown in Figure 7) is viewed with the development board in a portrait position with the BL600 series module on the top edge.

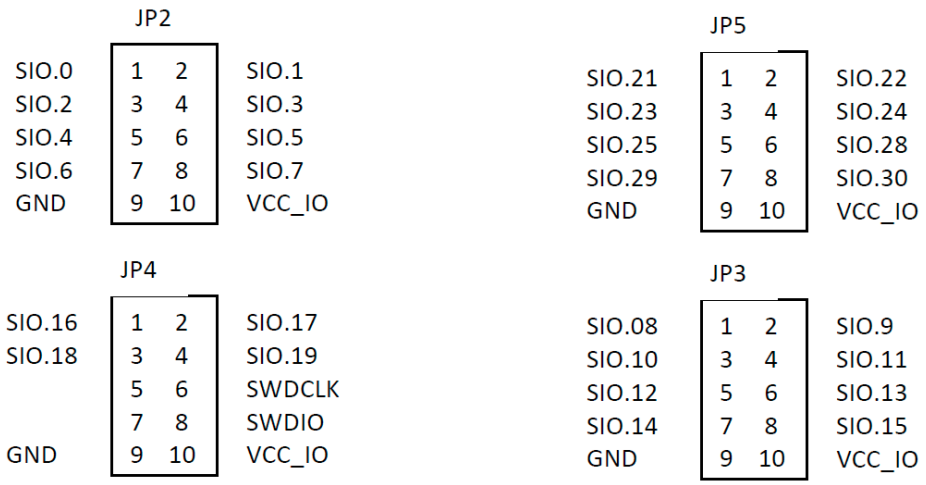

Figure 7: Breakout board connectors

On development board version (DVK-BL600-V02), the following silk screen text appears on the PCB:

- For JP2 SIO.01-07
- For JP3 SIO.8-15
- For JP4 SIO.16-19
- For JP5 SIO.21-30

6.1.1 JP2 SIO_0-7

In the *smart*BASIC application code written to use sensors on the development board (including the Temperature sensor - U1, Trim Pot - R9, Buzzer - U2, LED0 - D1, LED1 - D2, Button0 - SW1, and Button1 - SW3), the SIO pins direction and type (that these sensors are connected to, SIO_4, SIO_5, SIO_15, SIO_18, SIO_19, SIO_16, SIO_17 respectively) must be set in the *smart*BASIC application to override the defaults in the BL600 firmware.

Pin Designation	Default Function[1]	Alternate Function[2]	Default Direction[3]	Comment
SIO_0	DIO	-	Input	
SIO_1	DIO	AIN	Input	8, 9, 10 bit resolution – voltage scaling
SIO_2	DIO	AIN	Input	8, 9, 10 bit resolution – voltage scaling
SIO_3	DIO	AIN	Input	8, 9, 10 bit resolution – voltage scaling
SIO_4	DIO	AIN	Input	8, 9, 10 bit resolution – voltage scaling
SIO_5	DIO	AIN	Input	8, 9, 10 bit resolution – voltage scaling
SIO_6	DIO	AIN	Input	8, 9, 10 bit resolution – voltage scaling
SIO_7	DIO	AIN	Input	Internal pull down (default)

[1] *DIO: Digital Input or Output*
[2] *AIN: Analog Input*
[3] *Default Direction In BL600 module smart*BASIC runtime engine FW

6.1.2 JP3 SIO_8-15

Pin Designation	Default Function[1]	Alternate Function	Default Direction[3]	Comment
SIO_8	DIO	I2C_SDA	Input	
SIO_9	DIO	I2C_SCL	Input	
SIO_10	DIO	SPI_MOSI	Input	SPI_MOSI is an output in SPI master mode
SIO_11	DIO	SPI_MISO	Input	
SIO_12	DIO	SPI_CLK	Input	SPI_CLK is an output in SPI master mode
SIO_13	DIO		Input	
SIO_14	DIO		Input	
SIO_15	DIO		Input	Connects to BUZZER output on DVK

[1] *DIO: Digital Input or Output*
[2] *AIN: Analog Input*
[3] *Default Direction In BL600 module smart*BASIC runtime engine FW

6.1.3 JP4 SIO_16-19

Pin Designation	Default Function[1]	Alternate Function	Default Direction[3]	Comment
SIO_16	DIO		Input	Input for BUTTON 0 (SW1) on DVK
SIO_17	DIO		Input	Input to BUTTON 1 (SW3) on DVK
SIO_18	DIO		Input	Connects to LED 0 on DVK
SIO_19	DIO		Input	Connects to LED 1 on DVK

[1] *DIO: Digital Input or Output*
[2] *AIN: Analog Input*
[3] *Default Direction In BL600 module smart*BASIC runtime engine FW

Note: SIO_20 is a No Connect (N/C) and is reserved by Laird for future use.

6.1.4 JP5 SIO_21-30

Pin Designation	Default Function	Alternate Function[1]	Default Direction[3]	Comment
SIO_21	DIO	UART_TX	Output	
SIO_22	DIO	UART_RX	Input	
SIO_23	DIO	UART_RTS	Output	
SIO_24	DIO	UART_CTS	Input	
SIO_25	DIO		Input	UART_DTR (CON12) on DVK
SIO_26	NC			DO NOT CONNECT
SIO_27	NC			DO NOT CONNECT
SIO_28	nAutoRUN		Input ONLY	UART_DSR (CON12) on DVK
SIO_29	DIO		Input	UART_DCD (CON12) on DVK
SIO_30	DIO		Input	UART_RI (CON12) on DVK

[1] *DIO: Digital Input or Output*
[2] *AIN: Analog Input*
[3] *Default Direction In BL600 module smart*BASIC runtime engine FW

6.2 Additional Peripherals / Sensors

The BLE development board provides for simple and hassle free connectivity to a wide range of sensors, but also includes several on-board sensors and options to enable a developer to test functionality straight out of the box.

The additional peripherals and sensors on the development board can be isolated by micro-DIP switches CON14 and CON15.

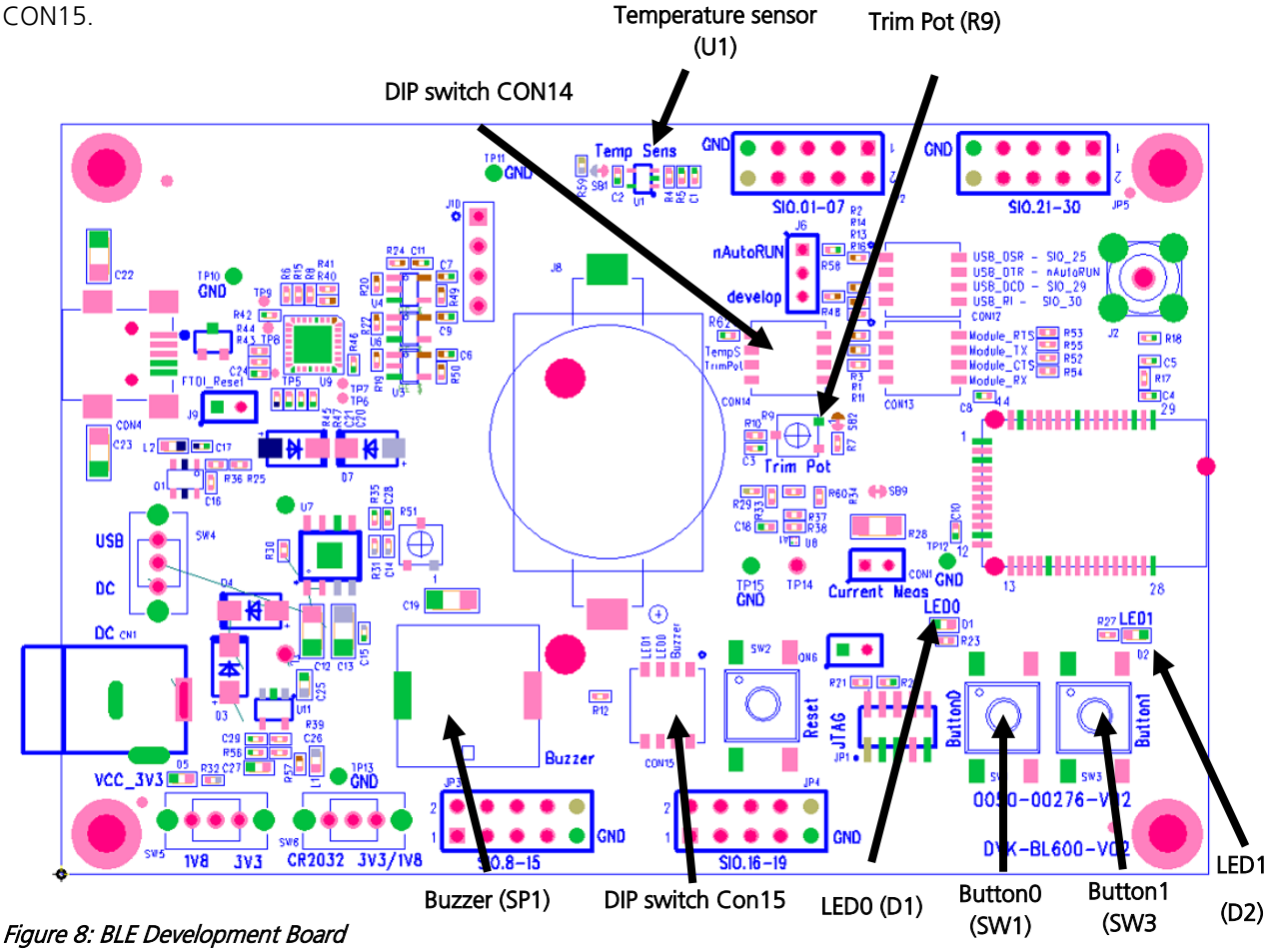

Figure 8: BLE Development Board

6.2.1 Buzzer

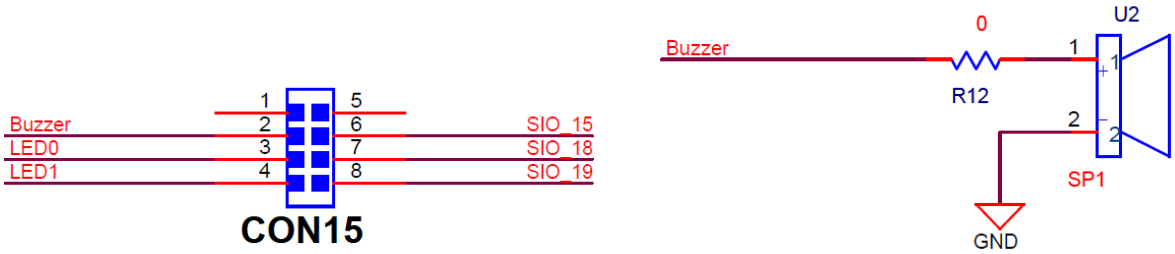

Figure 9: Buzzer

The buzzer (U2) ACTC SMD PIEZO BUZZER part number APD-1203-PQ1 can be disconnected from BL600 module by micro-DIP switch CON15. Physical micro-DIP switch body has text "ON" on the closed side.

To drive the buzzer, configure SIO_15 as a digital output using *smart*BASIC GpioSetFunc(15,2,0) and then, for example, write a 0 followed by a 1 to SIO_15 repeatedly in a loop.

Sample *smart*BASIC applications are available from a Laird FAE, or refer to "bzt.buzzer.test.sb" in the *smart*BASIC sample application library on BL600 product pages at:
http://lairdtech.com/Products/Embedded-Wireless-Solutions/Bluetooth-Radio-Modules/BL600-Series/

6.2.2 Temperature Sensor

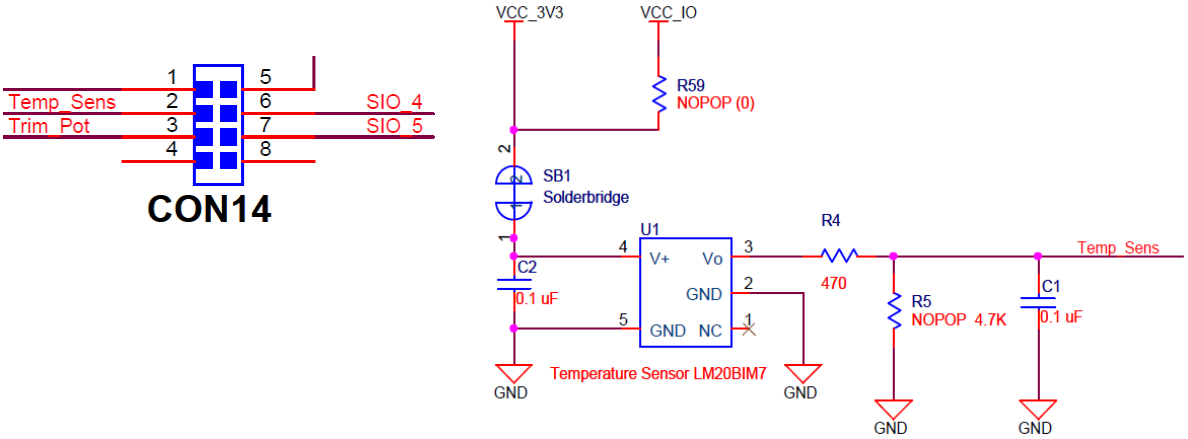

Figure 10: Temperature Sensor

The temperature sensor (U1) can be disconnected from BL600 module by micro-DIP switch CON14. Physical micro-DIP switch body has text "ON" on the closed side.

The temperature sensor (U1) can be disconnected from supply rail by cutting the solder bridge SB1.

The development board on-board temperature sensor (TI LM20BIM7 www.ti.com/lit/ds/symlink/lm20.pdf) has an Analogue output that is connected to BL600 module pin SIO_04; but since the LM20BIM7 has an analogue output, the BL600 module SIO-04 digital pin (DIO) must be configured as AIN analogue input (ADC). To configure the SIO_4 pin from DIO pin to Alternate function AIN, see file "ts.temperature.sensor.sb" in the *smart*BASIC sample application library on BL600 product pages at:
http://lairdtech.com/Products/Embedded-Wireless-Solutions/Bluetooth-Radio-Modules/BL600-Series/.

Key specifications of the LM20BIM7:

Output type	Analogue output
Accuracy at 30°C	±1.5°C ±4°C (max)
Accuracy at 40°C to +85°C	approx. ±2.5°C ±5°C (max)
Power supply voltage range	+2.4 V to 5.5 V
Current Drain	10 uA (max)
Output impedance	160 Ohms (max)

LM20BIM7 datasheet states Temperature (T) to Voltage output (Vo) relationship approximated as a linear equation (for temperature range of -40°C to +85°C):

Vo(mV) = -11.79mV/°C x T + 1858.3

The table below gives below calculated Vo versus temperature:

Temperature (T)	Typical Vo
+80°C	+924.7mV
+70°C	+1041.4mV
+60°C	+1158.1mV

Temperature (T)	Typical Vo
+50°C	+1274.8mV
+40°C	+1391.5mV
+30°C	+1508.2mV
+20°C	+1624.9mV
+10°C	+1741.6mV
+0°C	+1858.2mV
-10°C	+1975.0mV
-20°C	+2091.7mV
-30°C	+2208.4mV

6.2.3 Trim Potentiometer

The Trim Potentiometer is located in the middle of the development board to the right hand side of the coin cell holder. It is labelled 'Trim Pot' on the silkscreen.

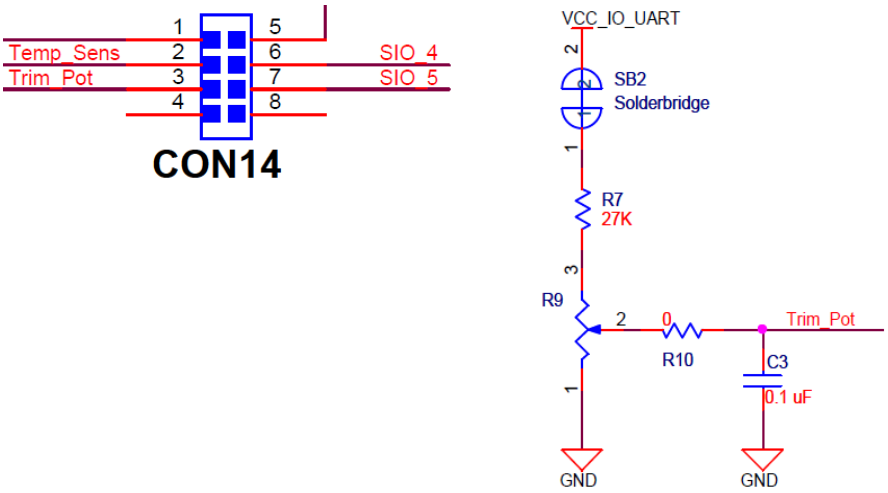

Figure 11: Trim Potentiometer

The Trim Potentiometer (R9) can be disconnected from BL600 series module by micro-DIP switch CON14. Physical micro-DIP switch body has text "ON" on the closed side.

The Trim Potentiometer (R9) can be disconnected from supply rail by cutting the solder bridge SB2.

The Trim Potentiometer generates a voltage range of 0 V to ~0.9 V at C3 (CON14 pin3), see file *tpt.trimpot.test.sb* in the *smart*BASIC sample application library on BL600 product pages at http://lairdtech.com/Products/Embedded-Wireless-Solutions/Bluetooth-Radio-Modules/BL600-Series/.

6.2.4 Push Buttons and LEDs

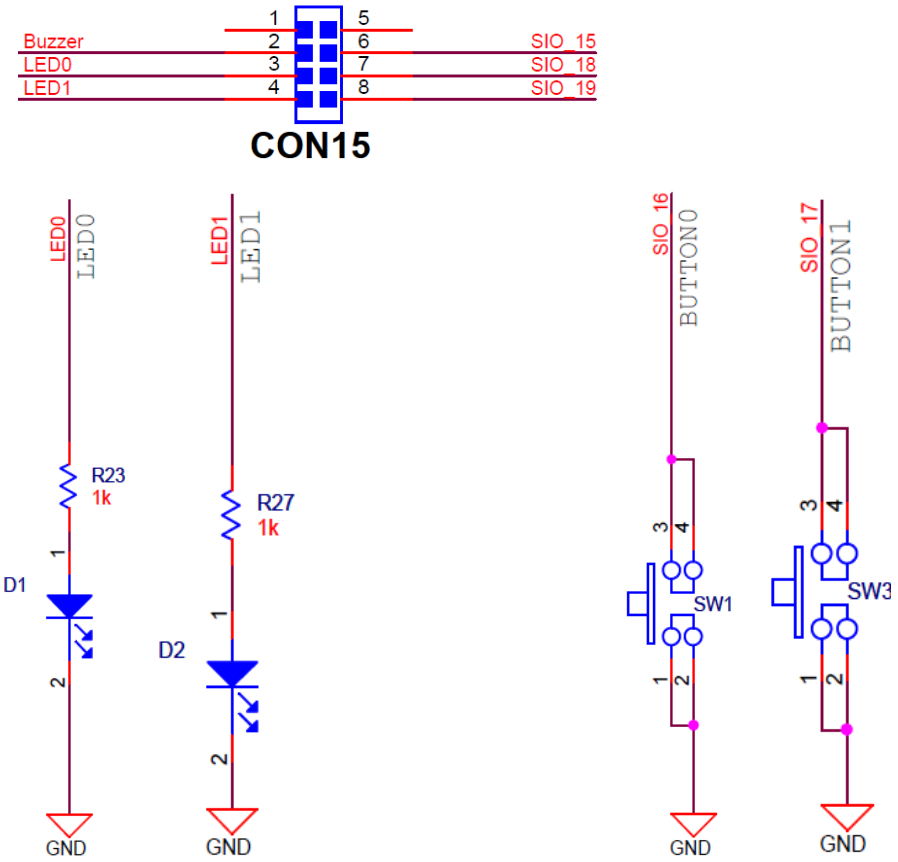

Figure 12: Push buttons and LEDs

The two push buttons and two LEDs on the DVK-BL600-V02 are connected to dedicated SIOs of the BL600 module.

Part	SIO
Button 0 (SW1)	SIO_16
Button 1 (SW3)	SIO_17
LED 0 (D1)	SIO_18
LED 1 (D2)	SIO_19

If SIO_18 and SIO_19 are needed elsewhere, the LEDs can be disconnected by micro-DIP switch CON15. Physical micro-DIP switch body has text "ON" on the closed side.

The buttons have no external pull-up resistor, so to use the buttons the SIO_16 and SIO_17 pins must be configured as an input with internal pull-up resistor. Example: A *smart*BASIC line that configures the pull-up. For further details see file "btn.button.led.test.sb" in the *smart*BASIC sample application library on BL600 product pages at http://lairdtech.com/Products/Embedded-Wireless-Solutions/Bluetooth-Radio-Modules/BL600-Series/.

- rc = GPIOSETFUNC(16,1,4): '//sets sio16 (Button0) as a digital in, strong pull up
- rc = GPIOSETFUNC(17,1,1): '//sets sio17 (Button1) as a digital in weak, pull down

The LEDs are active high, meaning that writing a logical one ("1") to the output pin illuminates the LED.

One example of when push buttons can be used is when a *smart*BASIC application is written to simulate a generic data profile. Push buttons can then be pressed to increment or decrement, such as a heart rate.

7 Other Features

7.1 Current Consumption Measurement

A removable jumper (CON1) is provided to break the power supply line directly to the module (if SB9 is cut), allowing you to measure current consumption. For normal operation, CON1 must be fitted.

IMPORTANT: To achieve the optimal power consumption of the BL600 series module on the development board, see the "LowPower.SB" file in the *smart*BASIC sample application library on BL600 product pages at http://lairdtech.com/Products/Embedded-Wireless-Solutions/Bluetooth-Radio-Modules/BL600-Series/.

Note: This only measures the current consumption of the BL600 series module ONLY.

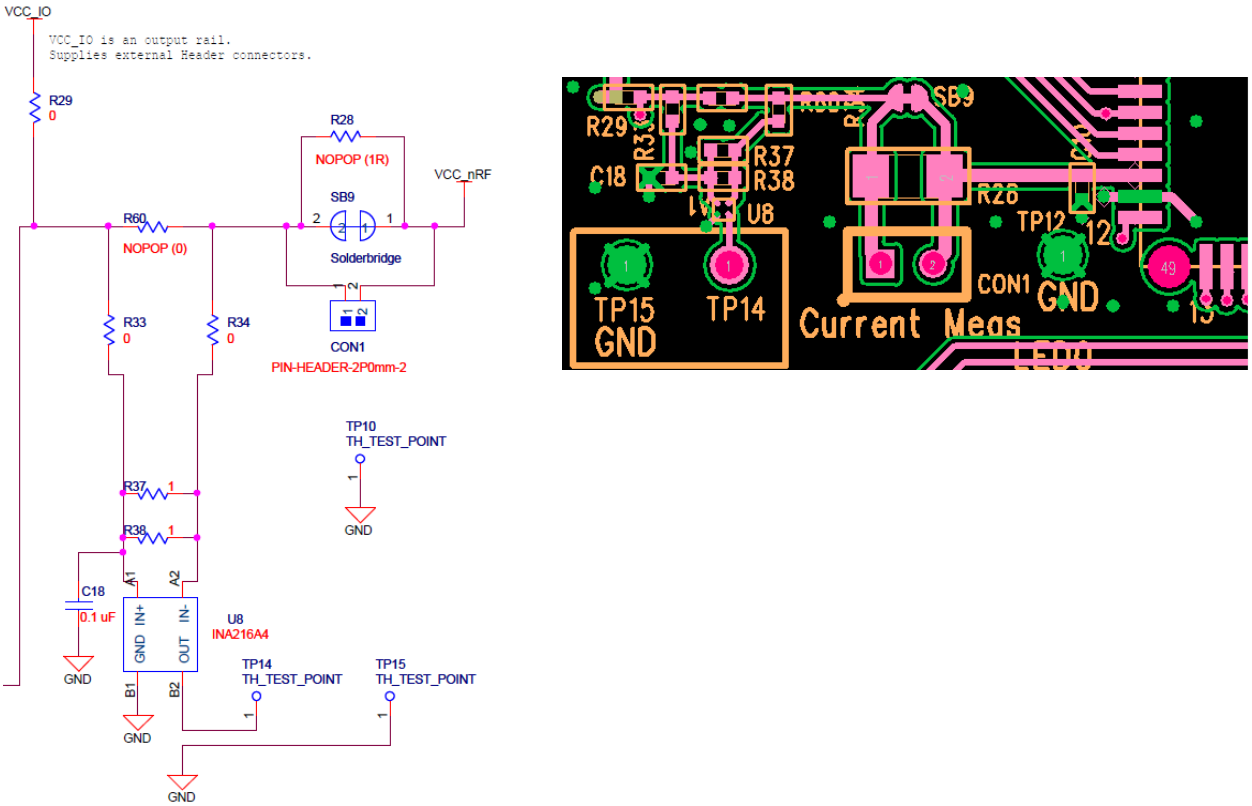

Figure 13: Current measurement Schematic and component location

The current drawn by the BL600 series module can be monitored on the development board. Figure 13 shows the schematic (and location of measuring points on PCB) related to current measurements.

To prepare the board for current measurement, **cut the shorting of the solder bridge SB9.** After this modification there are two primary ways to measure the current consumption:

- **Using Ammeter –** Connect an ampere meter between the two pins of connector CON1. This monitors the current directly.
- **Using Oscilloscope (Note1) –** Mount a resistor on the footprint R28. The resistor should not be larger than 10 Ohm. Connect an oscilloscope or similar with two probes on the pin on the CON1 connector and measure the voltage drop. The voltage drop is proportional with current consumption. If a 1 Ohm resistor is chosen, 1 mV equals 1mA.

There is also a third way to measure current:

- Using Current Shunt Monitor – The current drawn by the BL600module can be monitored using the Current Shunt Monitor (CSM), INA216 (U8). The gain of INA216 is 200 V/V for lowest possible drop voltage.

Note: The Using Current Shunt Monitor method allows the dynamic current consumption waveforms on oscilloscope as the BL600 radio operates. This can provide insight into power optimization.

Current consumed by the BL600 series module is measured as a voltage (that is proportional to the current) using the CSM by connecting measuring voltmeter OR oscilloscope to TP14 Connect measuring voltmeter or oscilloscope GND to TP15.

I(mA) = Vmeas_TP14(mV) /100

CAUTION: Take care not to short TP14 (the Current Shunt Monitor IC (U8)) output to GND, as that will permanently damage the IC U8.

8 Additional Documentation

Laird offers a variety of documentation and ancillary information to support our customers through the initial evaluation process and ultimately into mass production. Additional documentation includes:

- BL600 – *smart*BASIC Core Functionality
- BL600 – *smart*BASIC BL600 Extensions
- BL600 – *smart*BASIC sample applications library
- BL600 Firmware Upgrade Application note
- DVK-BL600 - Schematics
- DVK-BL600 – Quick Start Guide for Heart Rate and Thermometer
- DVK-BL600 – Quick Start Guide for Proximity
- BL600 – Hardware Integration Guide and Datasheet (version 2.1)
- BL600 – Hardware Integration Guide and Datasheet (version 2.4)
- BL600 Hardware Integration Guide and Datasheet – DVK-BL600-Sx-05 (for DVK-BL600-Sx Version 5 only)

For any additional questions or queries, or to receive technical support for this Development Kit or for the BL600 module series, please contact the Embedded Wireless Solutions Support Center: http://ews-support.lairdtech.com

9 APPENDIX

9.1 Coin Cell Insertion

To insert the coin cell, follow these steps:

1. Push the coin cell against positive contact spring of holder J8.

   Note: The coin cell sits below the positive contact spring (as shown with arrow).

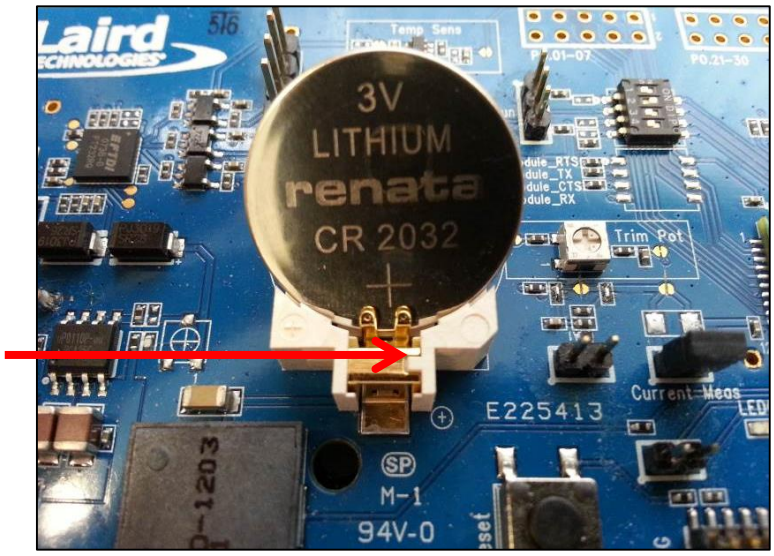

Figure 14: Inserting the coin cell (step 1)

2. Push the coin cell down into the holder (J8).

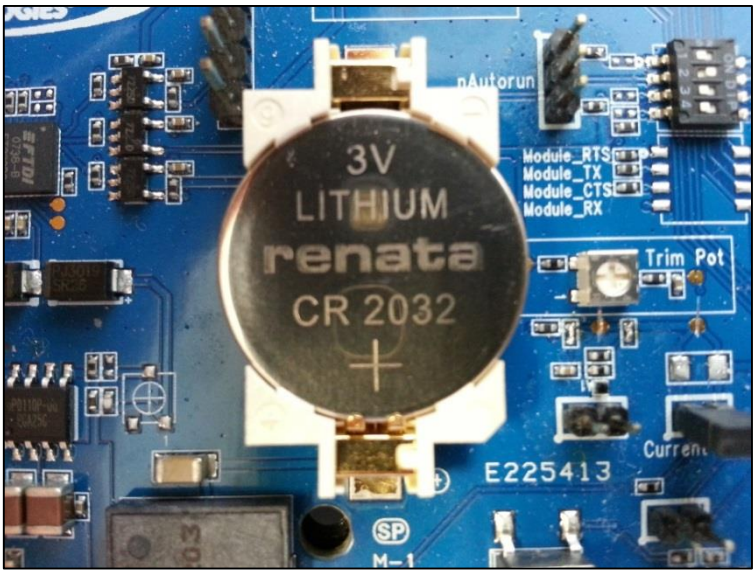

Figure 15: Inserting the coin cell (step 2)

9.2 Coin Cell Removal

To remove the coin cell, follow these steps:

1. Hold down the coin cell holder (J8) at the corners.
2. Use a screwdriver in the position shown in picture below, to gently remove the coin cell from the coin cell holder (J8), This is the correct method to remove coin-cell from holder (J8).

Note: Due to tight fit of coin cell in the coin-cell holder (J8), care should be taken prevent damage to the J8 land pads.

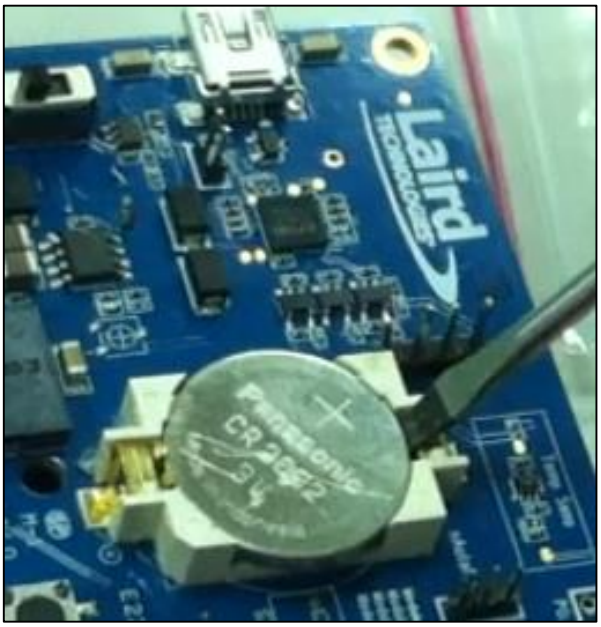

Figure 16: Removing the coin cell (step 2)

CONN-GUIDE_DVK_BL600_v2.1
Copyright © 2013 Laird Technologies, Inc. All rights reserved.
The information contained in this manual and the accompanying software programs are copyrighted and all rights are reserved by Laird Technologies, Inc. Laird Technologies, Inc. reserves the right to make periodic modifications of this product without obligation to notify any person or entity of such revision. Copying, duplicating, selling, or otherwise distributing any part of this product or accompanying documentation/software without the prior consent of an authorized representative of Laird Technologies, Inc. is strictly prohibited.
All brands and product names in this publication are registered trademarks or trademarks of their respective holders.
This material is preliminary Information furnished by Laird Technologies in this specification is believed to be accurate. Devices sold by Laird Technologies are covered by the warranty and patent indemnification provisions appearing in its Terms of Sale only. Laird Technologies makes no warranty, express, statutory, and implied or by description, regarding the information set forth herein. Laird Technologies reserves the right to change specifications at any time and without notice. Laird Technologies' products are intended for use in normal commercial and industrial applications. Applications requiring unusual environmental requirements such as military, medical life-support or life-sustaining equipment are specifically not recommended without additional testing for such application.
Limited Warranty, Disclaimer, Limitation of Liability